INOX COLLECTION

Colonne doccia da Esterno-Interno

CRIWX715

For a luxury hotel context or in a private garden,the Indoor & Outdoor Showers are the idealcomplement for moments of relaxation and leisureoutdoors or in wellness environments.Four different diameters allow for a personalisedchoice in each environment and relative needs.All the proposals exploit the advantages of thematerial they are made: stainless steel, answeringfully to the demands of resistance, unalterableness,hygiene, ease of cleaning and use, required by theworldwide contract sector.The series includes versions with mechanical, progressive and, mixing and timed flow(equipped with timed foot jet). Antifreeze water draining system to preserve theproduct during the winter months when usedoutdoors.It is recommended to close the system and emptythe excess water by opening the control handleand unscrewing the plugs at the base.To reactivate proceed in the reverse way.

Before ordering items requiring certifications on particular markets, please check with your sales contact

Technical description

External single-control Ø60 mm floor-standing shower set, timed pre-mixed water tap, timed foot jet, anti-frost water drainage system, outdoor/indoor, for completion with recessed part CRICS292

COMMAND
Single-control

INSTALLATION
Floor-standing

TYPOLOGY
External set

ENVIRONMENT
Bathroom,Outdoor

FINISHES

28 - Brushed Stainless Steel AISI

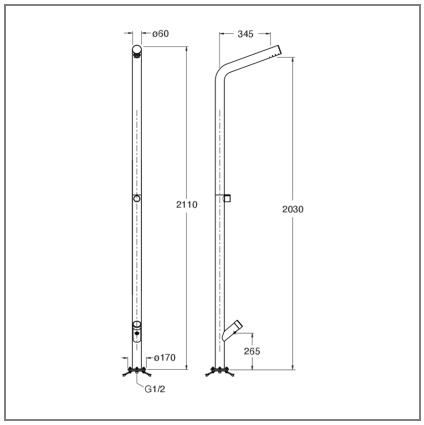

Built-in part

CRICS292

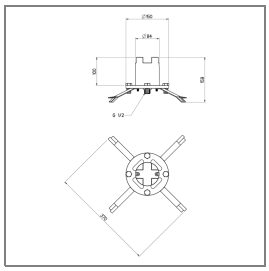

Floor-standing recessed set, 1 x 1/2" inlet, Ø150 mm

CRISTINA S.r.l. Via Fava, 56 28024 Gozzano (NO) Italy
Tel. +39.0322.9545 | Fax +39.0322.956556 | info@cristinagroup.com
C.F e P.Iva. 00309260032 | Capitale Sociale 1.000.000 I.V. | Registro Imprese 00309260032 | Rea NO117362